yamada

Lubrication Equipment

https://ap.yamadacorp.co.jp/

About YAMADA• • •

The Yamada Corporation has been a leading producer of industrial equipment since 1905, and of fluid handling products for over 60 years. As a leader in pneumatic pumping technology, Yamada is known in many industries worldwide for its innovative products, superior quality, and unmatched reliability. Other companies may claim to be innovators, but an impressive history of delivering new products and solving customer problems confirms Yamada's position as the industry leader.

Yamada's reputation for manufacturing top quality products, allied with continuing efforts in research and development have created a strong foundation for market leadership. As an ISO 9001 certified corporation, stringent quality procedures are followed throughout the manufacturing process, including liquid testing of every pump prior to shipping.

The Yamada Corporation is headquartered in **Tokyo** with manufacturing facilities located throughout Japan. Satellite facilities are located in **Arlington Heights, Illinois, USA,** servicing the Western Hemisphere; **The Netherlands,** providing support throughout Europe, Africa, and the Middle East; **Thailand**, covering the Southeast Asia; and **Shanghai,** covering the emerging markets of China. These offices are support centers for over 300 authorized fully stocking Yamada distributors worldwide.

Yamada professional staff provides:

- Customer Service
- Product Training
- Research & Development
- Parts and Service for all Yamada® Pumps
- Application Engineering
- Industry Knowledge

With over 300 distributors, Yamada is effectively positioned to service your market needs. Contact Yamada for the location of your closest local stocking distributor.

For additional information, AutoCAD® drawings, product literature, and promotions, please visit ap.yamadacorp.co.jp

CONTENTS

Grease Guns 1
Grease Guns 2
Extensions 3
Bellows Cartridge Greases 4
Hand-Operated Oil Pumps 5
Hand-Operated Oil Pumps 6
Hand-Operated Grease Pumps 7
Air-Operated Oil Lubricators 8
Air-Operated Grease Lubricators 9
Air-Operated Bearing Packing Unit 10
Electric Driven Grease Lubricators 11
Air-Operated Oil Transfer Pumps 12
Air-Operated Grease Transfer Pumps 13
Air-Operated Grease Transfer Pumps 14
Waste Oil Drainers 15
Compact Reel YR Series 16
Hose Reel HR Series 17
Control Valves 18

Pump Selection Guide

Standard Size of Containers

Open Head Drum
JIS Z1600 (200 L)

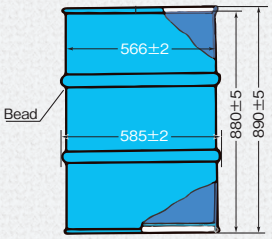

Tight Head Drum
JIS Z1601 (200 L)

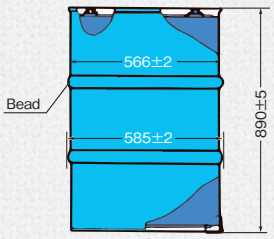

Open Head Straight Pail
JIS Z1620

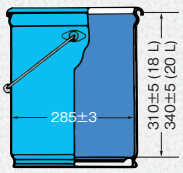

Open Head Taperd Pail
JIS Z1620

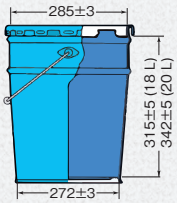

REMARKS

POWER SOURCES

- Compressed Air
- Manual
- AC 100V
- AC 240V
- DC 24V or Other Battery

SUITABLE MATERIAL FOR USE

- Oil
- NLGI No.0 Grease
- NLGI No.1 Grease
- NLGI No.2 Grease
- NLGI No.3 Grease
- Water or Hot Water

SUITABLE CONTAINER

- 18L(16kg) Pail
- 200L(180kg) Drum

METHODS OF LOADING

- Direct-filling
- 420mL Bellows Cartridge
- 210mL Bellows Cartridge
- 85mL Bellows Cartridge
- 400g DIN1284 Cartridge

Grease Guns

Hand Grease Guns

YAMADA is offering high quality, high performance and durable hand grease guns.
Select the best model for your needs depending on size, capacity, grease loading method, etc.
All grease guns are equipped with straight steel extension or 3-jaw steel extension as standard.

854655 KH-16

- Compact size pistol type grease gun with 3-jaw steel extension (CNP-2)
- Barrel with lipped follower for use with 140mL direct-filling or 85mL Bellows Cartridge

854629 KH-120

- Compact size light-weight grease gun with straight steel extension
- Barrel with lipped follower for use with 140mL direct-filling or 85mL Bellows Cartridge

854628 KH-32

- Small size grease gun with straight steel extension
- Barrel with lipped follower for use with 200mL direct-filling

854627 KH-35

- Medium size hand grease gun with straight steel extension
- Barrel with lipped follower for use with 400mL direct-filling or 210mL Bellows Cartridge

854669 CH-400EX

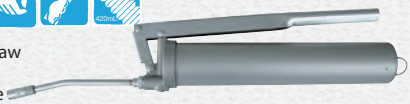

- Standard size grease gun with 3-jaw steel extension (CNP-2)
- Barrel with lipped follower for use with 500mL direct-filling or 420mL Bellows Cartridge

854787 CH-650LL

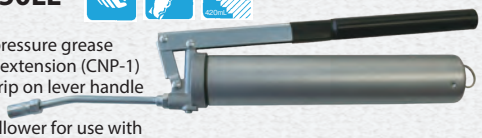

- Standard size high-pressure grease gun with 3-jaw steel extension (CNP-1)
- Ergonomic rubber grip on lever handle for comfortable use
- Barrel with lipped follower for use with 500mL direct-filling or 420mL Bellows Cartridge

854654 GC-57K

- Standard size grease gun with 3-jaw steel extension (CNP-2)
- Barrel with lipped follower for use with 500mL direct-filling or 400g DIN1284 Cartridge

Specifications

Model No.	Model	Length* (mm)	Extension	Weight* (kg)	Barrel Dia. (mm)	Barrel Capacity (mL)	Cartridge (mL)	Discharge per Stroke (mL)	Max Discharge Pressure (MPa)
854655	KH-16	241	CNP-2	0.44	38.0	140	85	0.4	10
854629	KH-120	232	HSP-1	0.51	38.0	140	85	0.6	20
854627	KH-35	290	HSP-1	1.11	59.6	400	210	1.0	25
854628	KH-32	412	HSP-1	1.27	59.6	200	------	1.6	25
854669	CH-400EX	368	CNP-2	1.30	59.6	550	420	1.0	50
854787	CH-650LL	401	CNP-1	1.30	59.6	550	420	1.0	80
854654	GC-57K	371	CNP-2	1.55	57	500	DIN 1284 (400g)	1.0	50

*Extension is not included

Dimensions

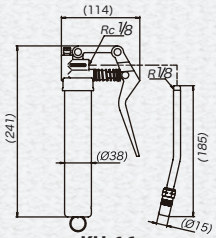

KH-16

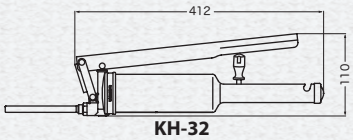

KH-32

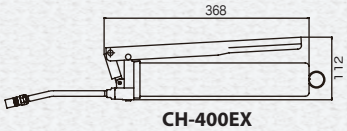

CH-400EX

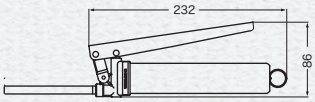

KH-120

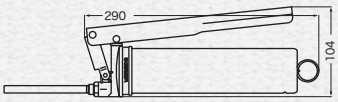

KH-35

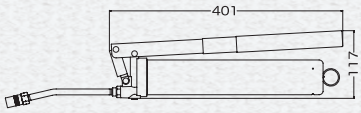

CH-650LL

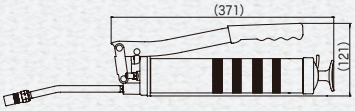

GC-57K

Air Operated Grease Guns

Grease flows continuously with press of the trigger.
Only available with 420mL Bellows Cartridge.

854884 AMG-400N

Dimensions

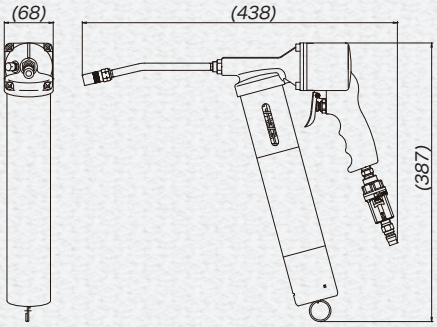

Specifications

Model No.	Model	Cartridge (mL)	Extension	Max Discharge Pressure (MPa)	Max Discharge Volume (mL/min)	Supply Air Pressure (MPa)	Weight (kg)
854884	AMG-400N	420	CNP-2	32	280	0.3-0.7	1.8

805195
GM-200

Digital Grease meter

Model No.	Model	Fits model
805195	GM-200	AMG-400, SKR series etc.

804918 Regulator

685472 Rotating plug

Extensions

Optional steel and flexible extensions for grease fittings are available. These can fit to all Hand Grease Guns.

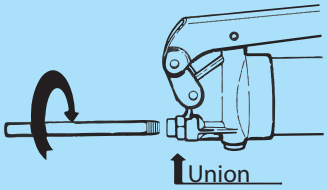

NOTE
When remove extension, please do not remove the Union Adapter.

Grease Fittings

JIS B 1575

Hydraulic Fitting
Most common fitting.

Pin Type Fitting

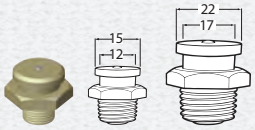

Button Head Fitting
Normal size and large size are available

804903 HSP-1

804910 CNP-1

850664 SPK-1C

804904 HSP-2

804911 CNP-2

855205 SPK-2C

800701 HSP-3

804912 CNP-13

850666 SPK-3C

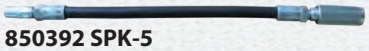

850392 SPK-5

804907 HSP-10

686445 CNP-1H

686446 CNP-2H

850381 SPK-20C

851268 SPK-700E

855206 SPK-2C-1M

850478 SPK-1C-1M

850480 SPK-3C-1M

Specifications

Type	Model No.	Model	Length(mm)	Weight(g)	Usable Grease Fitting	Remark
Straight Steel Extension	804903	HSP-1	120	46	Hydraulic Fitting	
	804904	HSP-2	240	96		
	800701	HSP-3	135	56	----------	Nozzle O.D. 1.5mm
	804907	HSP-10	450	188	Hydraulic Fitting	
Steel Extension with 3-jaw Coupler	804910	CNP-1	185	93	Hydraulic Fitting	O.D. 17mm
	686445	CNP-1H	38.5	37		3-jaw Coupler for CNP-1
	804911	CNP-2	185	93		O.D. 15mm
	686446	CNP-2H	39	37		3-jaw Coupler for CNP-2
	804912	CNP-13	335	180		O.D. 15mm
Flexible Extension with 3-jaw Coupler	850664	SPK-1C	355	141	Pin Type Fitting	
	855205	SPK-2C	373	152	Button Head Fitting	
	850666	SPK-3C	330	83	Hydraulic Fitting	
	855206	SPK-1C-1M	1069	189	Pin Type Fitting	
	850479	SPK-2C-1M	1073	214	Button Head Fitting	
Normal Operating Pressure: 21MPa	850480	SPK-3C-1M	1030	132	Hydraulic Fitting	
	850392	SPK-5	418	300	Hydraulic Fitting	Extension for CNP Series
	850381	SPK-20C	377	320	Large size Button Head Fitting	
	851268	SPK-700E	705	160	Hydraulic Fitting	

Dimensions

HSP-1 HSP-2 HSP-10

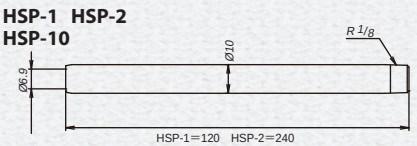

HSP-3

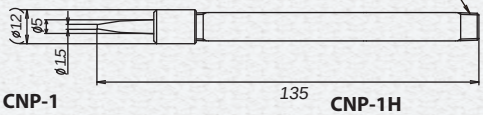

CNP-1

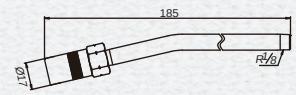

CNP-1H

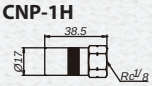

CNP-2・13

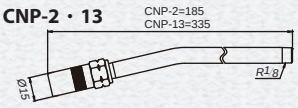

CNP-2H

SPK-1C・SPK-1C-1M

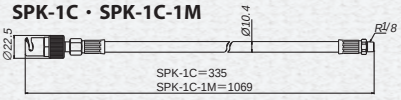

SPK-2C・SPK-2C-1M

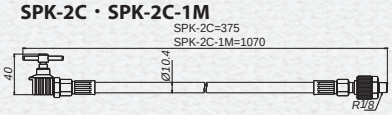

SPK-700E

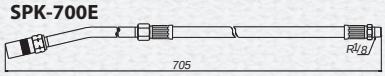

SPK-3C・SPK-3C-1M

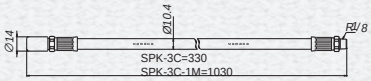

SPK-20C

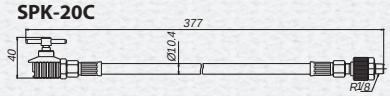

SPK-5

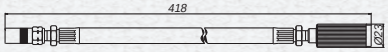

Grease Lock Coupler

Easy coupling - Leak proof greasing - Easy release!

686830 GLC-70

686966 GLC-70L

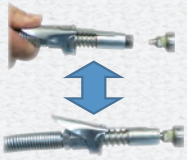

Easy connect and disconnect to/from grease fitting, by operating the lever.

SPK-500S/1000S/1500S

Specifications

Model No.	Model	Operating pressure	Connection	Dimensions(mm)	Weight
686830	GLC-70	69MPa	Rc1/8"	L89.6×Φ16	100g
686966	GLC-70L	69MPa	Rc1/8"	L137.3×Φ16	160g

Micro®hose type

Model No.	Model	Specifications
805177	SPK-500S	500mm(Micro® hose connection R1/8")
805178	SPK-1000S	1000mm(Micro® hose connection R1/8")
805252	SPK-1500S	1500mm(Micro® hose connection R1/8")

Bellows Cartridge Greases

YAMADA Bellows Cartridge Grease is reputed as clean, convenient and economical cartridge grease, which is long-selling product in Japan.
With the tightly-sealed bellows, contamination and air-pocket can be eliminated.
By the screw cap, the cartridge change is possible in the middle of use.

General Purpose Greases

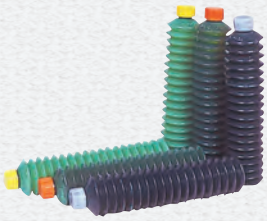

MMG-80 Series

MMG-200 Series

MMG-400 Series

Dimensions

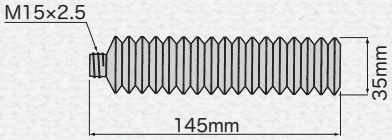

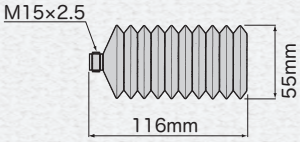

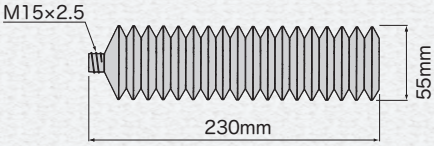

Specifications

Capacity, Qty per Carton Box	Model No.	Model	Grease Type	NLGI No.	ASTM Value	Temp Range	Fits model
420mL, 20pcs	682314	MMG-400MP	Lithium	No.2	265-295	-15℃ - 130℃	CH-400, CH-650LL, AMG-400
	682313	MMG-400CG	Chassis	No.1	310-340	-10℃ - 80℃	
	682312	MMG-400MO	Molybdenum	No.2	265-295	-15℃ - 150℃	
210mL, 20pcs	683311	MMG-200MP	Lithium	No.2	265-295	-15℃ - 130℃	KH-35
	683312	MMG-200CG	Chassis	No.1	310-340	-10℃ - 80℃	
	683313	MMG-200MO	Molybdenum	No.2	265-295	-15℃ - 150℃	
85mL, 30pcs	682593	MMG-80MP	Lithium	No.2	265-295	-15℃ - 130℃	KH-16,KH-120
	683309	MMG-80CG	Chassis	No.1	310-340	-10℃ - 80℃	
	683310	MMG-80MO	Molybdenum	No.2	265-295	-15℃ - 150℃	

Grease Characteristics

Grease Type	Features	Applications	Color of Cap	Color of Bellows
Lithium Grease (MP)	Extreme-pressure, Water-resistant, Heat-resistant, High durability	Bearings for industrial equipment, automobiles, construction equipment and conveyor	Yellow	Green
Chassis Grease (CG)	Extreme-pressure, Water-resistant	Chassis of automobiles, construction equipment, conveyor and agrucultural equipment	Orange	
Molybdenum Grease (MO)	Molybdenum-added, Extra high-pressure, Extra high-durrability	Construction equipment, joints, bearings, the part on which needs high-pressure and heating	White	

High Temp and Food Grade Greases

NPC-AA

FDL-FF20

Dimensions

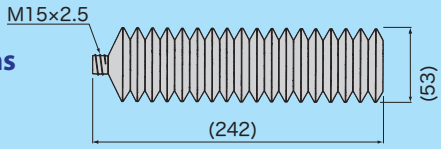

Specifications

Capacity, Qty per Carton Box	Model No.	Model	Grease Type	NLGI No.	ASTM Value	Temp Range	Fits model
420mL, 20pcs	687221	NPC-WEP	Urea	No.2	265-295	-15℃-180℃	CH-400, CH-650LL, AMG-400
	685800	FDL-FF20	Aluminum Complex	No.2	265-295	-20℃-180℃	
420mL, 5pcs	685801	FDL-FF5					

Grease Characteristics

Grease Type	Features	Applications	Color of Cap	Color of Bellows
Urea Grease (AA)	Extra high-temperature	Equipment for heavy industry, paper industry, cement industry, and any other application that require high heat resistance and long life	White	Green
Aluminum Complex (FF)	Meets the requirements by NSF-H1*	Food industry		White

*NSF:National Sanitation Foundation International

Hand-Operated Oil Pumps

Oil Bucket Pumps EXS Series

Ready-to-assemble economical series.
The small package can reduce shipping cost.

880626 STB-60EXS

880627 STB-70EXS

Installation

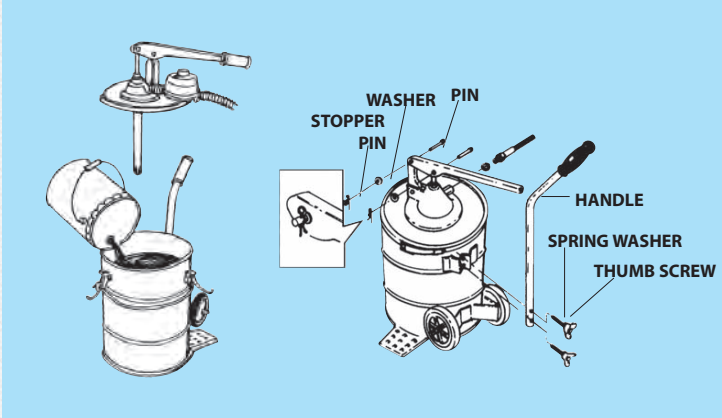

Specifications

Model No.	Model	Capacity (L)	Discharge Volume per Cycle (mL)	Stroke Length (mm)	Weight (kg)	Standard Accessories
880626	STB-60EXS	20	40.0	50.0	10.4	802519 Oil Hose Nozzle with Assy ·····1 805339 OM-30MN·····1
880627	STB-70EXS				9.0	802519 Oil Hose Nozzle with Assy ·····1

Dimensions

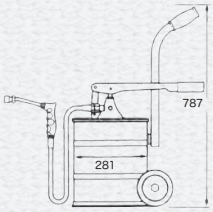

STB-70EXS

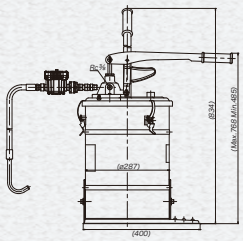

STB-60EXS

Optional Accessories

Model No.	Model	Description	Fits Model
805339	OM-30MN	Mechanical Oil Meter	STB-50/60/70
805185	OM-30D	Electronic Oil Meter	STB-50/60/70

805339 OM-30MN

805185 OM-30D

Hand Oil Suction Guns

Simple syringe pump for oil.

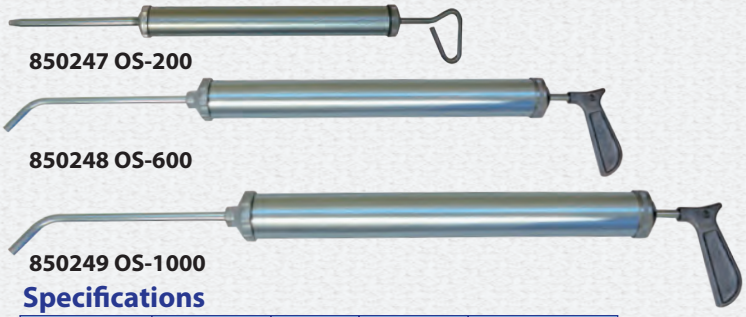

850247 OS-200

850248 OS-600

850249 OS-1000

Dimensions

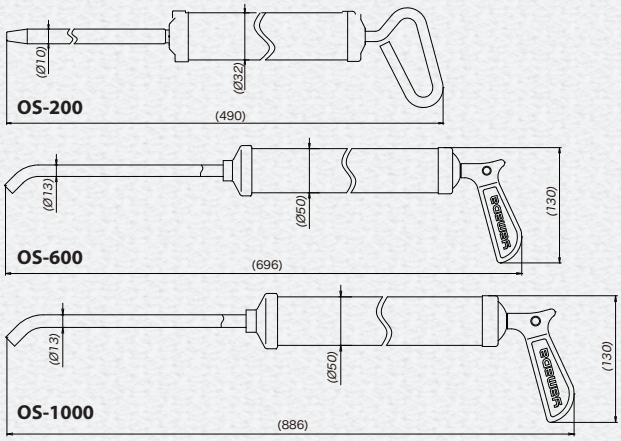

Specifications

Model No.	Model	Length (mm)	Weight (kg)	Capacity (mL)
850247	OS-200	490	0.57	200
850248	OS-600	696	1.28	600
850249	OS-1000	886	1.77	1000

Oil Pail Pump

880571 HOP-20

Simple pump that can be mounted on commercially available 20L pail. Oil meter STB-M can be mounted.

Dimensions

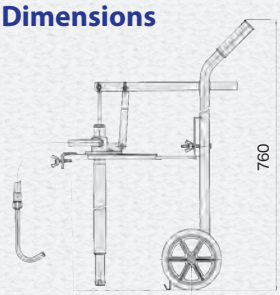

Specifications

Model No.	Model	Discharge Volume per Cycle (mL)	Stroke Length (mm)	Weight (kg)	Standard Accessories
880571	HOP-20	60.0	110.0	1.9	802823 STB-2MW Hose Nozzle Assy 2M (Vynil)·····1 851676 S-10N Dolly·····1

High Viscosity Oil Pumps

880132 VO-8
Compact size bucket pump

880133 VO-50
Small size oval shape bucket pump

Specifications

Model No.	Model	Discharge Volume per Cycle (mL)	Weight (kg)	Standard Accessories
880132	VO-8	20.0	5.0	695056 VO8-1M 1/4 x 1m Hose·····1 800772 VO8-15 Button Head Coupler·····1
880133	VO-50	24.0	9.6	695055 VO50-1.5M 3/8 x 1.5m Hose·····1 800894 VO50-15 Button Head Coupler·····1

Dimensions

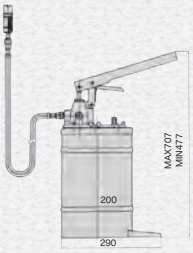

VO-8

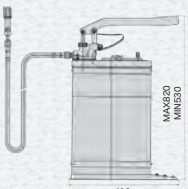

VO-50

Optional Accessories

800772 VO08-15
Button Head Coupler for VO-8

800894 VO50-15
Normal Size Button Head Coupler for VO-50

800628 VO50-22
Large Size Button Head Coupler for VO-50

Hand-Operated Grease Pumps

Grease Bucket Pump EXS Series

Ready-to-assemble economical series. The small package can reduce shipping cost.

880624 SK-77EXS

Installation

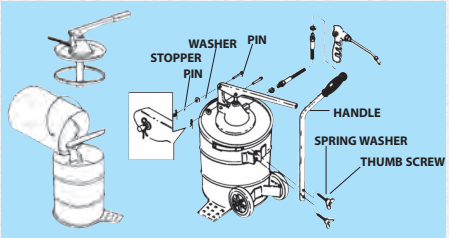

Dimensions

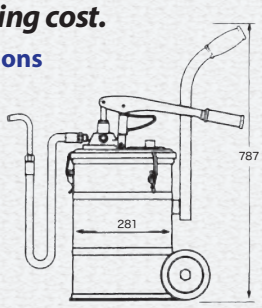

Specifications

Model No.	Model	Capacity (L)	Discharge Pressure (MPa)	Discharge Volume per Stroke (g)	Stroke Length (mm)	Weight (kg)	Standard Accessories
880624	SK-77EXS	20	25.0	3.2	38-43	9.6	800601 SK-G Grease Nozzle……1 695046 SK-2M Grease Hose 2M……1

Grease Bucket Pump SK series

Follower plate is equipped with SK-77 as standard.
Compact SK-8 is suitable for filed lubrication work.

880308 SK-77

880194 SK-8

Installation

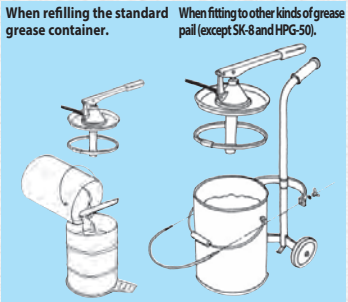

Dimensions

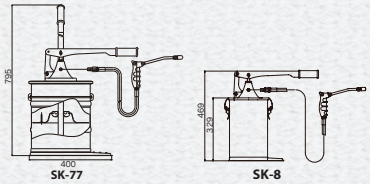

851003 S-20

Replacement Hoses

Specifications

Model No.	Model	Capacity (L)	Discharge Pressure (MPa)	Stroke Length (mm)	Weight (kg)	Standard Accessories
880308	SK-77	20	25.0	50.0	11.3	800601 SK-G Grease Nozzle……1 695046 SK-2M Grease Hose 2M……1 801426 Follower Plate……1 851003 S-20 Dolly……1
880194	SK-8	10	25.0	—	6	800601 SK-G Grease Nozzle……1 695046 SK-2M Grease Hose 2M……1

Optional Accessories

Model No.	Model	Description	Fits Model
851003	S-20	Dolly	SK-55, SK-77
695046	SK-2M	Grease Hose 2M Max 18MPa	SK-55, SK-77, SK-77EXS, SK-8
695100	SK-3M	Grease Hose 3M Max 18MPa	SK-55, SK-77, SK-77EXS, SK-8
695102	SK-5M	Grease Hose 5M Max 18MPa	SK-55, SK-77, SK-77EXS, SK-8

Grease Lock Coupler

Easy coupling - Leak proof greasing - Easy release!

686830 GLC-70

686966 GLC-70L

SPK-500S/1000S/1500S

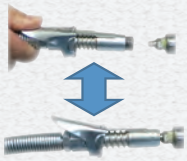

Easy connect and disconnect to/from grease fitting, by operating the lever.

Specifications

Model No.	Model	Operating pressure	Connection	Dimensions(mm)	Weight
686830	GLC-70	69MPa	Rc1/8"	L89.6×Φ16	100g
686966	GLC-70L	69MPa	Rc1/8"	L137.3×Φ16	160g

Micro®hose type

Model No.	Model	Specifications
805177	SPK-500S	500mm(Micro® hose connection R1/8")
805178	SPK-1000S	1000mm(Micro® hose connection R1/8")
805252	SPK-1500S	1500mm(Micro® hose connection R1/8")

Air-Operated Oil Lubricators

Standard SGR-55 and high volume, high pressure SGR110A5 are available.
SGR110A5 is equipped with float-type oil level gauge and mechanical oil flow meter with non-drip flexible extension as a standard.

880267 SGR-55

880635 SGR110A5

Dimensions

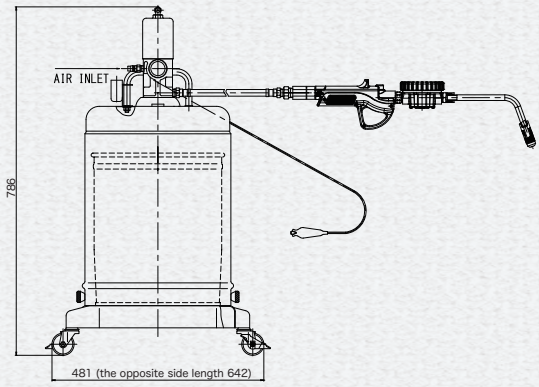

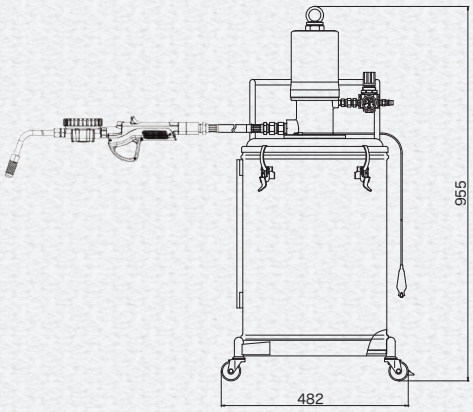

Specifications

Model No.	Model	Capacity (L)	Pump Ratio	Max Discharge Pressure (MPa)	Max Discharge Volume (L/min)	Max Air Consumption(NL/min)	Weight (kg)	Standard Accessories
880267	SGR-55	20 (Attached pail can)	1.8 : 1	1.2	7.0	200	17.0	850792 SGR-55PA Oil Transfer Pump·····1 686858 ODV-30D Electric Oil Control Gun·····1 695052 SGR-55-1.5M Oil Hose 1.5M·····1 682905 Pail Can·····1 680743 PS-20PM Air Coupler Plug·····1
880635	SGR110A5	50	5:1	3.5	11.0	630	27.5	851755 PD110A5 Oil Transfer Pump·····1 686858 ODV-30D Electric Oil Control Gun·····1 695700 110H-3M Oil Hose 3M·····1 802553 AR-110A Air Regulator w/ Air Plug·····1

Optional Accessories

Model No.	Model	Description	Fits Model
695052	SGR-55-1.5M	Oil Hose 1.5M Max 7MPa	SGR-55
695051	SGR-55-2M	Oil Hose 2M Max 7MPa	SGR-55
695103	SGR-55-3M	Oil Hose 3M Max 7MPa	SGR-55
695092	110H-2M	Oil Hose 2M Max 7MPa	SGR110A5
695700	110H-3M	Oil Hose 3M Max 7MPa	SGR110A5
695156	110H-5M	Oil Hose 5M Max 7MPa	SGR110A5

Replacement Hoses

Air-Operated Grease Lubricators

Air-Operated Grease Lubricators. Available with 16kg pail.

881190 SKR-55EX

880877 SKR-66

Dimensions

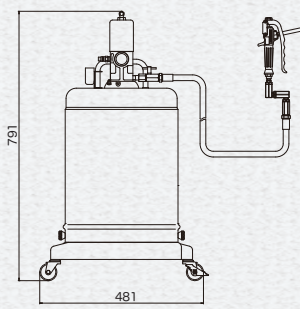

SKR-55EX

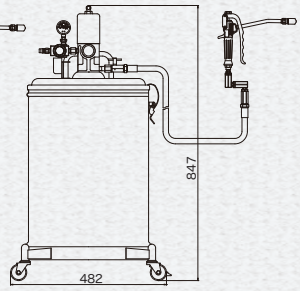

SKR-66

880631 SKR-110A50

880873 KPL-55

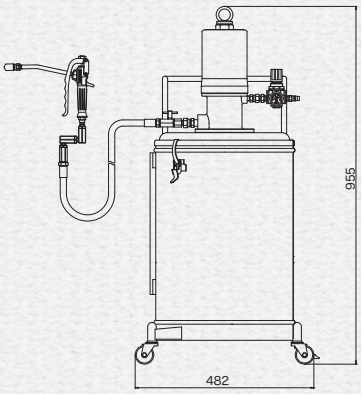

SKR-110A50

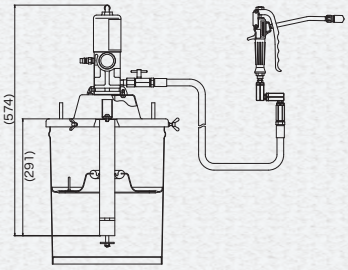

KPL-55

Specifications

Model No.	Model	Container	Pump Ratio	Max Discharge Pressure (MPa)	Max Discharge Volume (g/min)	Max Air Consumption (L/min ANR)	Weight (kg)	Standard Accessories
881190	SKR-55EX	Pail	55：1	38.5	320	212	13.5	852498 SKR-55PA Grease Transfer Pump·····1 851985 HPG-G HP Grease Gun·····1 695034 SKR-2.5M Grease Hose 2.5M·····1 800766 Check Valve·····1 680743 PS-20PM Air Coupler Plug·····1
880877	SKR-66	Pail	55：1	38.5	320	212	17.6	852764 SKR-66PA Grease Transfer Pump·····1 851985 HPG-G HP Grease Gun·····1 695034 SKR-2.5M Grease Hose 2.5M·····1 800766 Check Valve·····1 802161 Follower Plate·····1 801241 SKR-AR Air Regulator w/ Air Plug·····1
880631	SKR-110A50	Pail	50：1	35.0	1200	320	25.0	851779 PD110A50P Grease Transfer Pump·····1 851985 HPG-G HP Grease Gun·····1 695034 SKR-2.5M Grease Hose 2.5M·····1 800431 Check Valve·····1 803481 Follower Plate·····1 802553 AR-110A Air Regulator w/ Air Plug·····1
880873	KPL-55	Pail	55：1	38.5	320	212	9.4	852765 KPL-55PA Grease Transfer Pump·····1 851985 HPG-G HP Grease Gun·····1 695034 SKR-2.5M Grease Hose 2.5M·····1 800766 Check Vavle·····1 802161 Follower Plate·····1

Optional Accessories

Model No.	Model	Description	Fits Model
802161		Follower Plate	SKR-66, KPL-55
802335	KPL-55C	Caster	KPL-55
695062	SKR-1.5M	Grease Hose 1.5M Max 34.5MPa	SKR-55, SKR-66, SKR-110A50, KPL-55
695050	SKR-2M	Grease Hose 2M Max 34.5MPa	SKR-55, SKR-66, SKR-110A50, KPL-55
695034	SKR-2.5M	Grease Hose 2.5M Max 34.5MPa	SKR-55, SKR-66, SKR-110A50, KPL-55
695049	SKR-3M	Grease Hose 3M Max 34.5MPa	SKR-55, SKR-66, SKR-110A50, KPL-55
695098	SKR-5M	Grease Hose 5M Max 34.5MPa	SKR-55, SKR-66, SKR-110A50, KPL-55
695335	SKR-7M	Grease Hose 7M Max 34.5MPa	SKR-55, SKR-66, SKR-110A50, KPL-55
695099	SKR-10M	Grease Hose 10M Max 34.5MPa	SKR-55, SKR-66, SKR-110A50, KPL-55

802335 KPL-55C

802161Follower Plate

Replacement Hoses

Air-Operated Bearing Packing Unit

Air operated bearing grease packing unit is mounted on a cart with an air lift. The pump unit and lubricating cone are integrated into one unit, and the one-touch standard cone makes it easy to set bearings, allowing the machine to be used on a wide range of vehicles. Grease is discharged at high pressure (max. 45 MPa) for efficient operation.

881141 GP-850

Specifications

Model No.	Model	Suitable Bearing Size	Suitable Grease*	Weight(kg)	Standard Accessories
881141	GP-850	I.D. Φ15-100	Oil temp. above 0°C: NLGI No.0-No.3 Oil temp. below 0°C: NLGI No.0-No.2	42	802629 Inductor Plate ……1

* Applicable range of NLGI No. is for reference only. Depending on the properties of the grease, it may not be usable even within the applicable range.

Optional Accessories

854923 Attachment Kit N

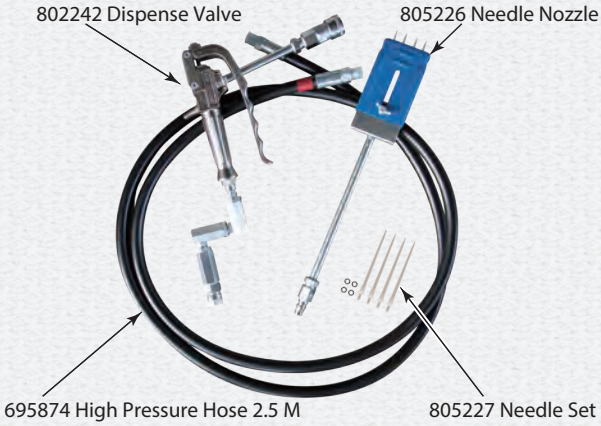

Components

Model No.	Model	Description
*805226	GP-NA	Needle Nozzle
*802242	GP-G	Dispense Valve
*695874	GP-H-2.5M	High Pressure Hose
805227	-	Needle Set

Remark: The parts with * in the table above are not individually supplied.

Electric Driven Grease Lubricators

AC100V electric, AC240V electric and DC24V battery driven grease lubricators.
Available with JIS 18L/20L pail.

880899 EPL-100 / 881081 EPL-240

880639 KPL-24

Dimensions

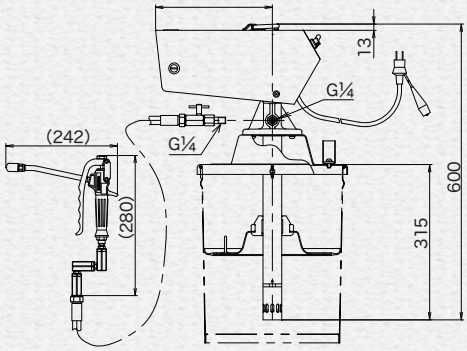

EPL-100 / EPL-240

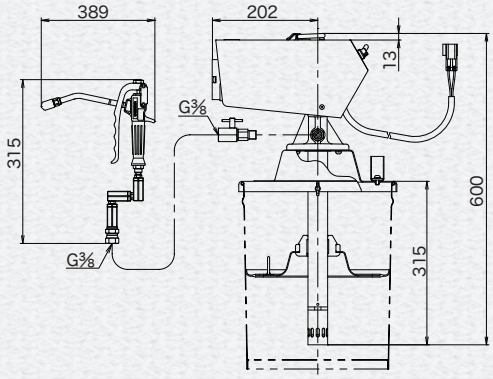

KPL-24

Specifications

Model No.	Model	Usable Container	Power Source	Discharge Volume (g/min)	Max Discharge Pressure (MPa)	Rotationg Speed (rpm)	Quake Resistance	Weight (kg)	Standard Accessories
880899	EPL-100	JIS 18L Pail	AC100V 100W 2.0A	200	28	90-145	4G	13.0	851985 HPG-G HP Grease Gun……1 695034 SKR-2.5M Grease Hose 2.5M……1 803085 Follower Plate……1 802493 Power Cord Assy……1
881081	EPL-240		AC240V 100W 0.83A						
880639	KPL-24	JIS 18L Pail	DC24V 90W 6.3A	130	28 (30min,rating)	95-108	4G	12.0	852164 HPG-G13 HP Grease Gun……1 803085 Follower Plate……1 685940 Union Adapter……1 802704 Power Cord Assy……1

Optional Accessories

Model No.	Model	Description	Fits Model
851003	S-20	Dolly	EPL-100, EPL-240, KPL-24
802335	KPL-55C	Caster	EPL-100, EPL-240, KPL-24
695062	SKR-1.5M	Grease Hose 1.5M Max 34.5MPa	EPL-100, EPL-240
695050	SKR-2M	Grease Hose 2M Max 34.5Pa	EPL-100, EPL-240
695034	SKR-2.5M	Grease Hose 2.5M Max 34.5MPa	EPL-100, EPL-240
695049	SKR-3M	Grease Hose 3M Max 34.5MPa	EPL-100, EPL-240
695098	SKR-5M	Grease Hose 5M Max 34.5MPa	EPL-100, EPL-240
695335	SKR-7M	Grease Hose 7M Max 34.5MPa	EPL-100, EPL-240
695099	SKR-10M	Grease Hose 10M Max 34.5MPa	EPL-100, EPL-240
695303	KPL-24-10M	Grease Hose 10M Max 34.5MPa	KPL-24
802817	KPL-E5M	Extension Power Cord 5M	KPL-24
686980	YSR-3C15	Grease Reel 15M	

686980 YSR-3C15

851003 S-20

Replacement Hoses

802817 KPL-E5M

802335 KPL-55C

Air-Operated Oil Transfer Pumps

Oil Transfer Drum Pumps

Air-operated oil transfer pumps. Drum Bung Adapter is equipped as a standard.

852628 DR-50A1

852633 DR-50A3

880966 DR-90A3

Dimensions

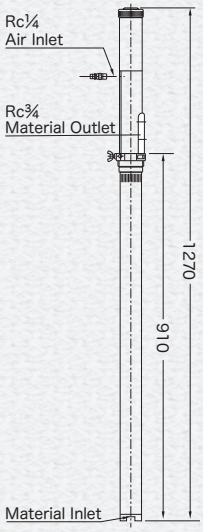

DR-50A1

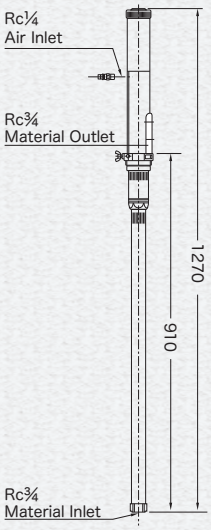

DR-50A3

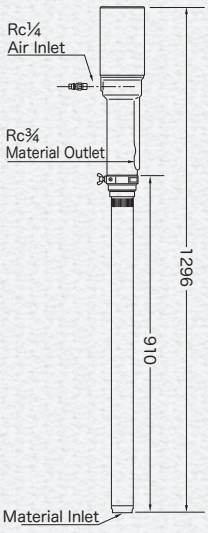

DR-90A3

Specifications

Model No.	Model	Pump Ratio	Max Discharge Volume (L/min)	Max Air Consumption (NL/min)	Weight (kg)	Discharge Port
852628	DR-50A1	1 : 1	29.0	460	5.0	Rc3/4”
852633	DR-50A3	3 : 1	12.0	470	5.4	
880966	DR-90A3		22.0	550	7.1	

Oil Transfer Siphon Pumps

Short shank type. Suitable for wall mounting.

852629 SH-50A1

852634 SH-50A3

880967 SH-90A3

Dimensions

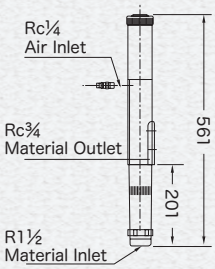

SH-50A1

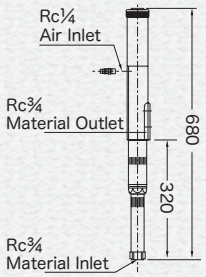

SH-50A3

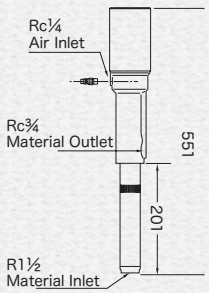

SH-90A3

Specifications

Model No.	Model	Pump Ratio	Max Discharge Volume (L/min)	Max Air Consumption (NL/min)	Weight (kg)	Discharge Port
852629	SH-50A1	1 : 1	29.0	460	2.6	Rc3/4”
852634	SH-50A3	3 : 1	12.0	470	3.3	
880967	SH-90A3		22.0	550	4.5	

Pressure Relief Valve & Return Hose

Devices for the purpose of protecting pump, pipe and control valves. When internal pressure of pipe reaches predetermined limit, the Pressure Relief Valve opens and the excess oil is released from the pipe to the drum/tank through the Return Hose.

Model No.	Description
695358	Return Hose

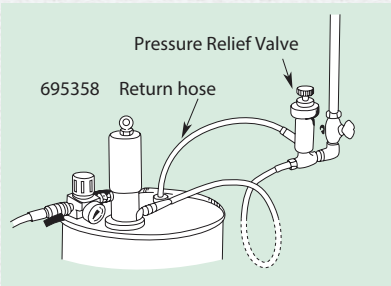

Air-Operated Grease Transfer Pumps

Wall/Floor Mounting Sets

Wall/Floor mounting sets for Oil Transfer Siphon Pumps.

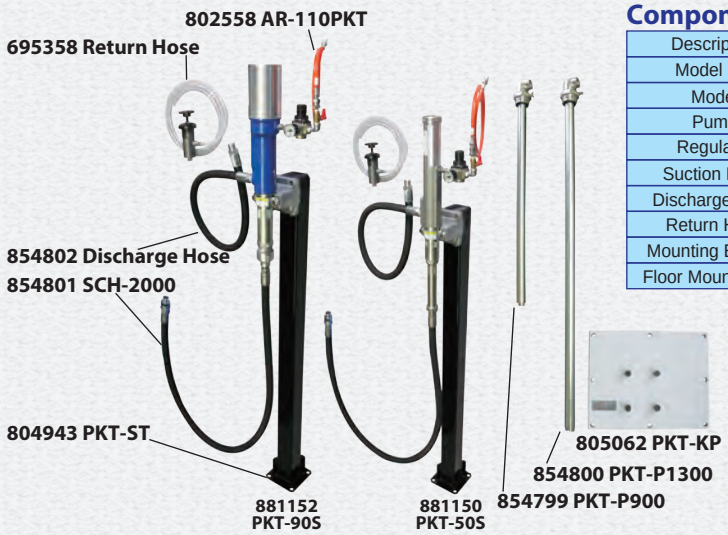

Components

Description	Wall Mounting Set		Floor Mounting Set	
Model No.	881149	881151	881150	881152
Model	PKT-50	PKT-90	PKT-50S	PKT-90S
Pump	852634 SH-50A3	880967 SH-90A3	852634 SH-50A3	880967 SH-90A3
Regulator	802558 AR-110PKT (with R1/4×1.5m Hose)			
Suction Hose	854801 SCH-2000			
Discharge Hose	854802 Discharge Hose (R3/4×1.5M)			
Return Hose	695358 Return Hose			
Mounting Bracket	800400 MTB-SH			
Floor Mount Stand	----------		804943 PKT-ST	

Optional Accessories

Model No.	Model	Description	Remark
854799	PKT-P900	Suction Pipe for 200L Drum	L=906mm
854800	PKT-P1300	Suction Pipe for Tank	L=1,300mm
805062	PKT-KP	Wall Mounting Panel	Fits to PKT-50,PKT-90

Liquid Level Alarms

When the liquid level reaches a predetermined limit, this totally pneumatic liquid level sensor automatically stop the pumps and it blows the whistle instead.
It can be mounted to 200L drum directly by 3/4" bung adapter.
When using with Pressure Relief Valve and Return Hose, please use RL-SA Return Hose Adapter.

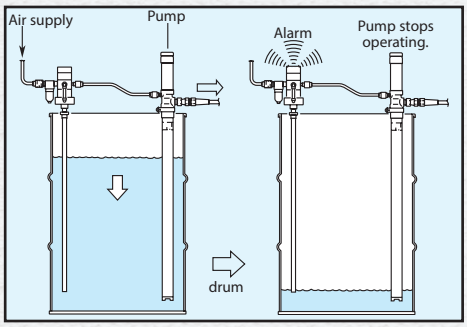

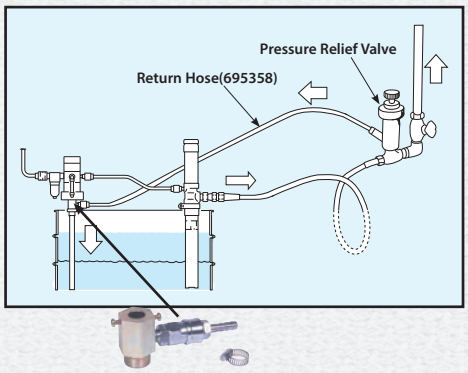

802781 RL-SA
Return Hose Adapter

Specifications

Model No.	Model	Application	Air Pressure (MPa)	Max Output Air Flow (L/min ANR)	Viscosity Limit	Weight (kg)	Standard Accessories
480007	SA-4100	Lower limit detection	0.25-0.7	1000	2.5Pa-s (2,500cps)	2.2	680743 PM-20PM Air Coupler
480008	SA-4110	Upper limit detection					

Oil Dispenser

Standard type pump for drums. Light-weight aluminum construction allows easy replacement of drums. The pump is suitable for pumping low viscosity oil.

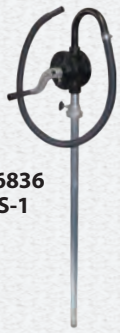

Specifications

Model No.	Model	Suitable Liquid	Gear ratio	Max. Discharge Volume*	Weight(kg)
686836	RDS-1	Light oil, Kerosene, lubricant, Low-medium vicosity oil	1:1	10L/40rev	3.6

* Reference values for engine oil (10W-30) and oil temperature 20℃. These are not guaranteed values.

Grease Transfer Drum Pump

Air-operated Drum Cover and follower plate kit for 180kg (400lb).
Grease Gun and wide variety of length of Grease Hoses can be chosen.

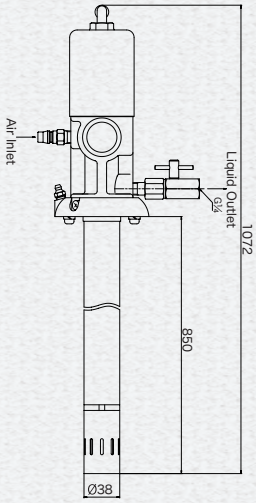

880847 SKR-850A55
Drum Pump for 180kg(400lb) Drum

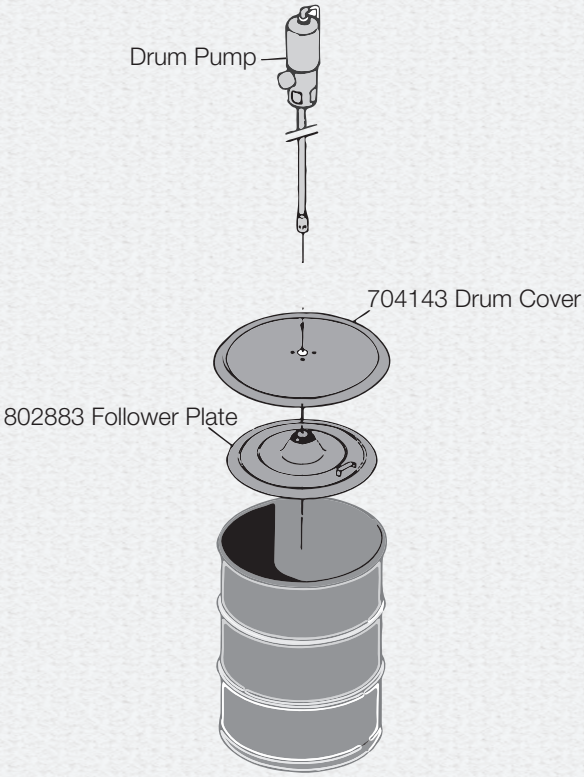

Specifications

Model No.	Model	Shank Length (mm)	Suitable Container	Pump Ratio	Max Discharge Pressure (MPa)	Max Discharge Volume (g/min)	Max Air Consumption (NL/min)	Weight (kg)	Components
880847	SKR-850A55	850	180kg (400Lbs)	55:1	38.5	320	212	6.8	852501 SKR-850P55 Pump·····1 802159 Pump Flange·····1 800766 Check Valve·····1

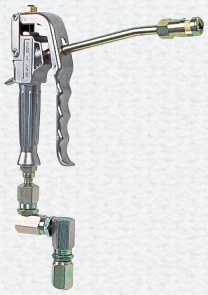

851985 HPG-G
HP Grease Gun

Model No.	Model	Description	Components
851985	HPG-G	HP Grease Gun	852165 Gun Body·····1 800547 CNP-2·····1 802910 HPG-J Swivel·1

Grease Hoses

Model No.	Model	Description
695062	SKR-1.5M	Grease Hose 1.5M Max 34.5MPa
695050	SKR-2M	Grease Hose 2M Max 34.5MPa
695034	SKR-2.5M	Grease Hose 2.5M Max 34.5MPa
695049	SKR-3M	Grease Hose 3M Max 34.5MPa
695098	SKR-5M	Grease Hose 5M Max 34.5MPa
695335	SKR-7M	Grease Hose 7M Max 34.5MPa
695099	SKR-10M	Grease Hose 10M Max 34.5MPa

Waste Oil Drainer

The oil drain is designed to reliably collect waste oil, facilitating the clean and quick transfer of accumulated waste oil, allowing for the steady processing of waste oil.

881137-B
OD-700PG-B

The serviceable oil drain features a built-in manual rotary pump and large receiving pan for easy operation, and the height of the receiving pan can be easily adjusted.

The receiver pan can be rotated 360° for easy positioning.

The top lid comes with a handy accessory compartment for storing tools and elements.

Large, easy-to-read oil level gauge

Adoption of casters with better handling over gratings and conduits.

Air Operated Multi Oil Changer

881140 MD-700DP

✓ Receive
✓ Intake
✓ Transfer
Three-in-one function for multiple uses.

Built-in air-driven diaphragm pump also serves as an oil changer for removing oil from vehicle level gauges by using the attached extraction nozzle to vacuum out the pump.

Partially transparent suction hose allows for the confirmation of the flow of waste oil.

The top lid is equipped with a convenient storage space for drain plugs and other small items.

Attached nozzle
Material: PFA
O.D. Φ6 I.D. Φ4.5

Easy switching between suction and discharge by a simple operation of the lever.

Large, easy-to-read oil level gauge

Adoption of large casters to prevent fall-out in the presence of gratings and conduits.

Air Hose Reel

Compact and light-weight air hose reel with durable and flexible 1/4" x 10M hose.

686608
YR-2A10

Installation

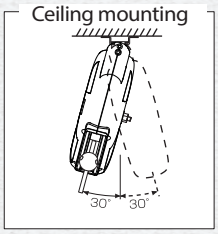

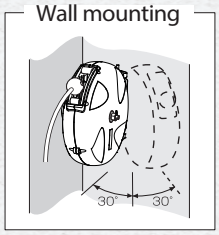

Swing function is equipped as a standard

Easy Coupling

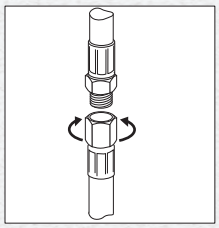

Delivery hose can be changed easily by "Easy Coupling"

Dimensions

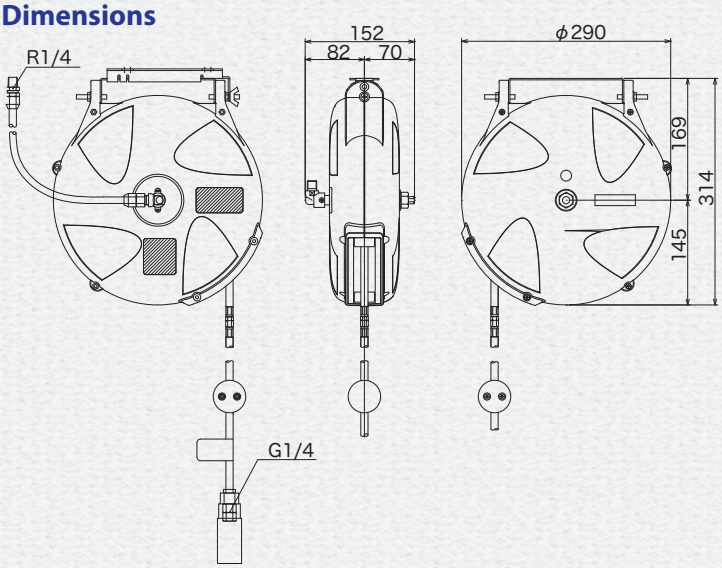

Specifications

Model No.	Model	Delivery Hose				Max Pressure (MPa)	Inlet Hose		Weight (kg)
		I.D. (mm)	Length (M)	Connection	Material		Length (m)	Connection	
686608	YR-2A10	6.5	10.0	G1/4"	Urethane	1.4	0.8	R1/4"	3.5

Hose Reel YSR Series

Hose Reels

Open type hose reel with durable engineering plastic reel drum.
Angle of delivery hose outlet can be adjusted depending of place of installation.

687095
YSR-4A15

686976
YSR-4W15

686977
YSR-3WH15

686978
YSR-3G10

686979
YSR-4G15

686980
YSR-3C15

Media	Model No.	Model	I.D. x Length x Connection		Max Pressure (MPa)	Temp Range (°C)	Weight (kg)	Dimensions (mm) H x W x Ø
			Delivery Hose	Inlet Hose				
Air	687095	YSR-3A15	8mm x 15m x Rc3/8	8mm x 1m x G3/8	1.4	-5 - 50	14.2	470 x 225 x 501
	686975	YSR-4A15	11mm x 15m x Rc1/2	11mm x 1m x G1/2			15.9	
Water	686976	YSR-4W15	13mm x 15m x G1/2	13mm x 1m x G1/2	0.5	0 - 50	17.6	
HP Hot Water	686977	YSR-3WH15	9.5mm x 15m x G3/8	9.5mm x 1m x G3/8	14.0	0 - 50	19.9	
Oil	686978	YSR-3G10	9.5mm x 10m x G3/8	9.5mm x 1m x G3/8	7.0	-5 - 50	17.2	
	686979	YSR-4G15	12.7mm x 15m x G1/2	12.7mm x 1m x G1/2			21.9	
Grease	686980	YSR-3C15	9.5mm x 15m x G3/8	9.5mm x 1m x G3/8	35.0	-5 - 50	22.6	

Mounting Brackets

By simply using Mounting Rail and Mounting Bracket, it is possible to install multiple HR series hose reels onto the ceiling easily.

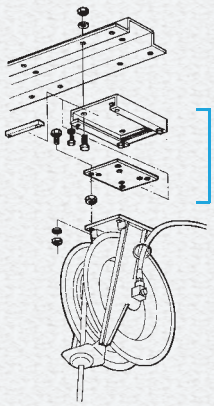

801951 RK-S
Mounting Bracket

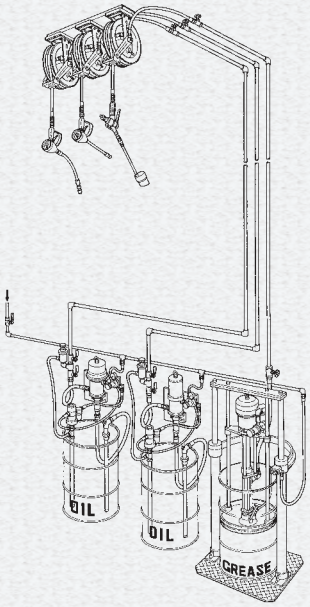

Control Valves

Wide variety of control valves available

804553 OIL-SJ
Swivel joint
Rc3/8 and Rc1/2 x R1/2

687064 LBM-GM
Lube mechanical meter

686981 LBM-60M
Mechanical preset meter

686773 LBM-P19
Digital batch meter

805159 NDN-F-3
Non-drip flexible pipe extension

805161 NDN-H-3
Non-drip flexible hose extension

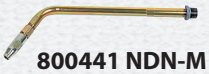

800441 NDN-M
Non-drip steel extension
60° angled head

801152 NDN-P
Non-drip steel extension

687103 NOZ-P
Steel extension

801204 NDN-L
Non-drip steel extension
L-shape pipe

686857 ODV-30
Oil control gun

686858 ODV-30D
Electric oil control gun

851985 HPG-G
HP Grease Gun

Dimensions

686773 LBM-P19

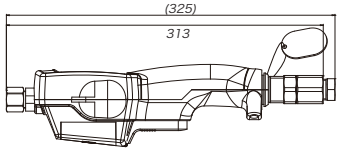

851985 HPG-G

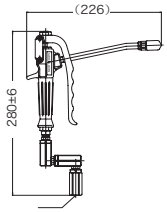

686857 ODV-30

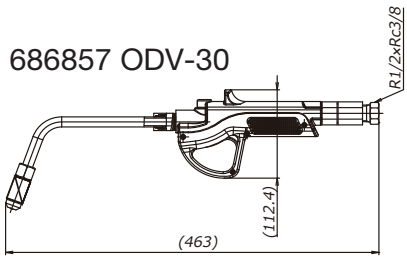

686858 ODV-30D

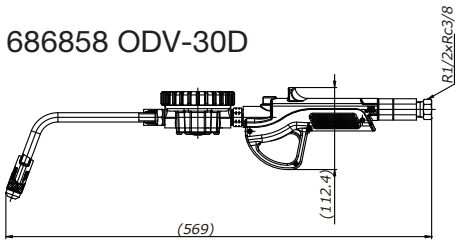

801152 NDN-P

800441 NDN-M

801204 NDN-L

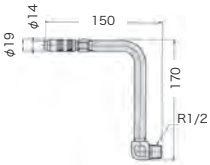

805159 NDN-F-3

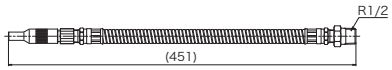

805161 NDN-H-3

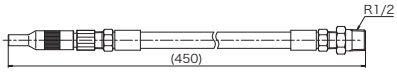

REQUEST SHEET

YAMADA CORPORATION
International sales Department
E-mail:intl@yamadacorp.co.jp

For help and recommendations for pump choice and applications, please complete this form with as many details as possible.
Please send it by fax to Yamada Corporation and we will get straight back to you.

- Are you already using Yamada products ? (YES・NO)
- Have you dealt directly with Yamada Corporation in the past ? (YES・NO)
- How did you learn about Yamada Corporation.
  ( )

Purpose of this request.

- ☐ Request for technical information.
- ☐ Request for quotation.
- ☐ Request to purchase products.
- ☐ Request for more information.
- ☐ Request for catalogues of flyers.
- ☐ Request for local dealer contact details.
- ☐ Other.

Company

Address (with Postcode):

Phone: ( ) Fax: ( )

Department/Section/Group: Name

To: YAMADA CORPORATION, International Department

Please provide a sketch of your system including as many details as possible

1) Potential product: Model Diameter A

2) Objectives:

3) Specifications of fluid:

Name Fluid properties Concentration %

Specific gravity Viscosity cp Temperature ℃

Slurry included? ☐ Yes ／ ☐ No →Concentration Wt% Diameter mm

4) Pump output (Flow rate) Nominal rate /min /hr Max. rate /min /h

Total stroke M MPa

Ambient temperature

5) Fluid container: ☐ 200L Drum container ☐ 20L Pail container ☐ 18L square container

☐ Custom container: Specifications

6) Operation conditions: ☐ Outdoor／☐ Indoor

Operation frequency (How often do you run your pump?) Continuous / Intermittent hr/day or hr/week or hr/month

7) Air supply condition: MPa

8) Number of units: unit(s)

9) Expected commercial conditions

10) Other requirements

CAUTION WHEN SELECTING A PUMP

Yamada offers a large range of Air Operated Pumps to cater for many different kinds of materials and conditions. When selecting the most appr opriatepump for a particular selection and installation please consult your local Yamada Pump Distributor or Yamada Corporation.

Your Local Distributor:

All product specifications and data are subject to change without notice.

Revised: Jan. 2024

YAMADA CORPORATION

International Sales Department

No.1-3, 1-Chome, Minami-Magome,
Ohta-ku,Tokyo 143-8504, Japan

Phone +81-(0)3-3777-0241
Fax +81-(0)3-3777-0584

E-mail: intl@yamadacorp.co.jp
Web: https://ap.yamadacorp.co.jp/